Installation Manual

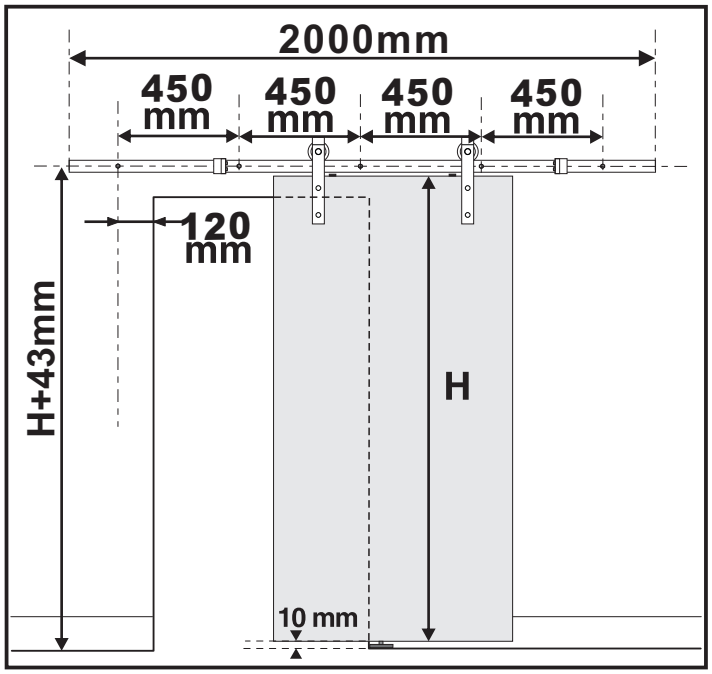

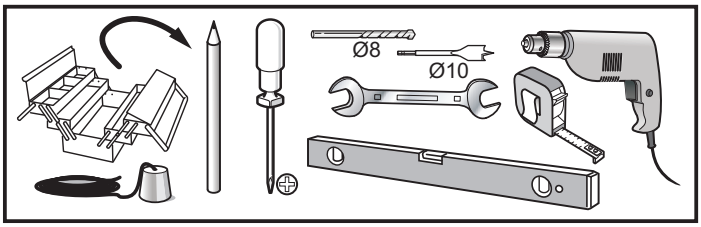

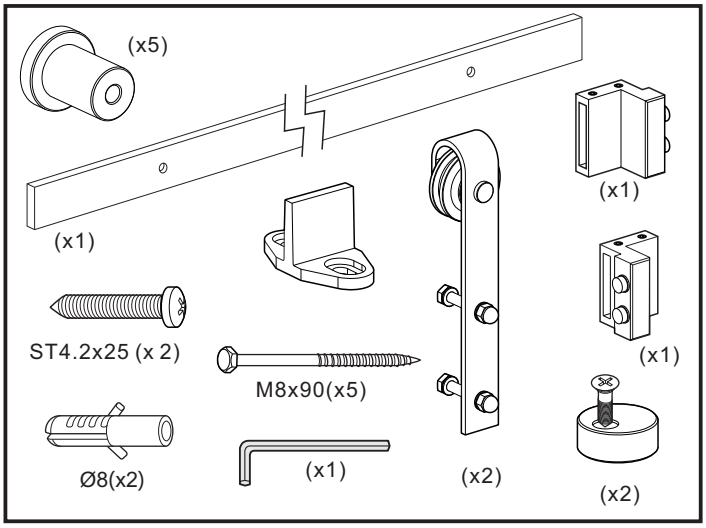

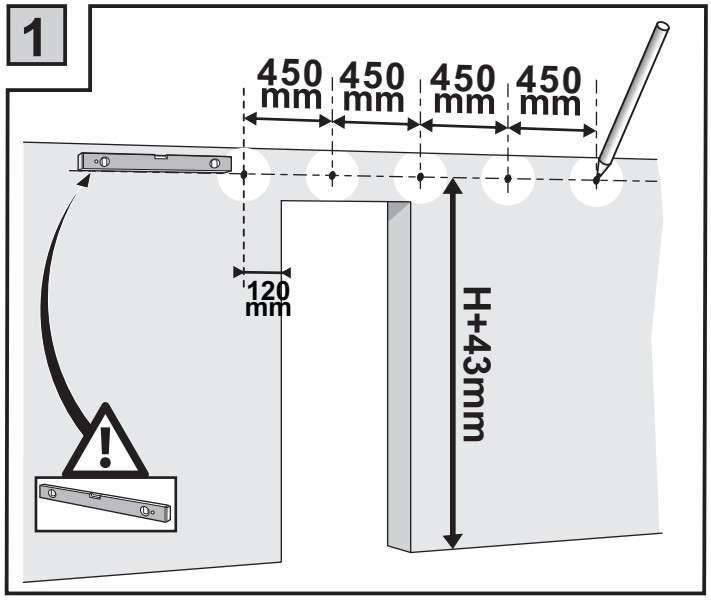

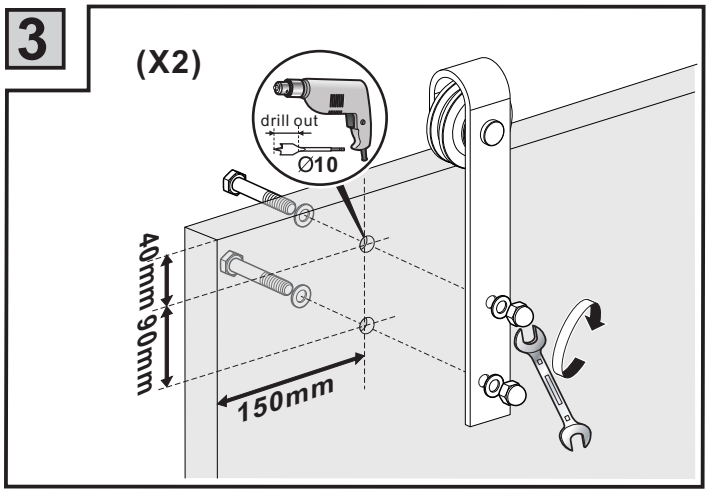

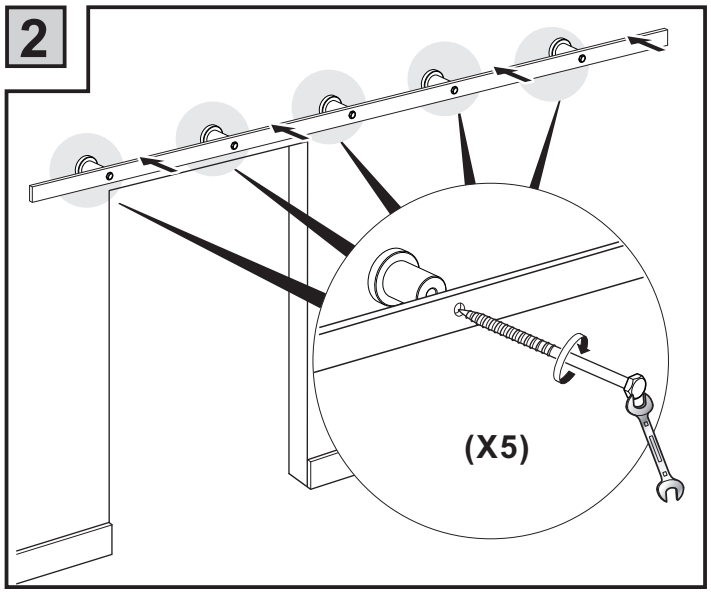

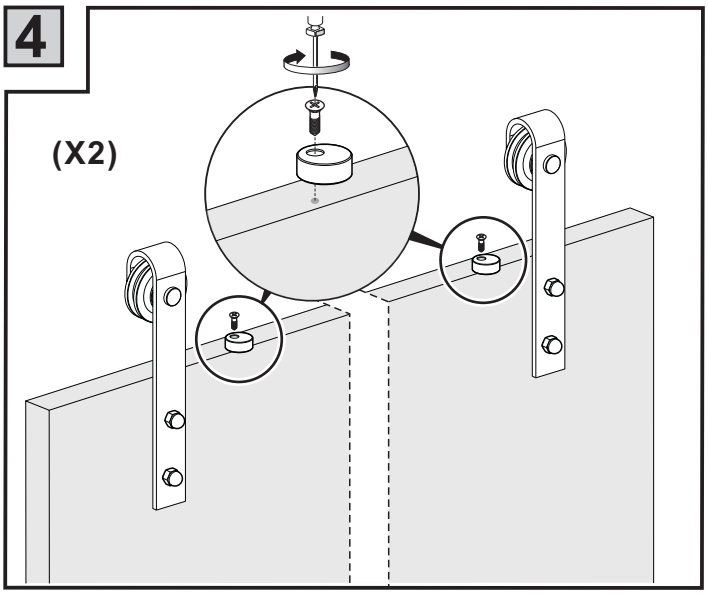

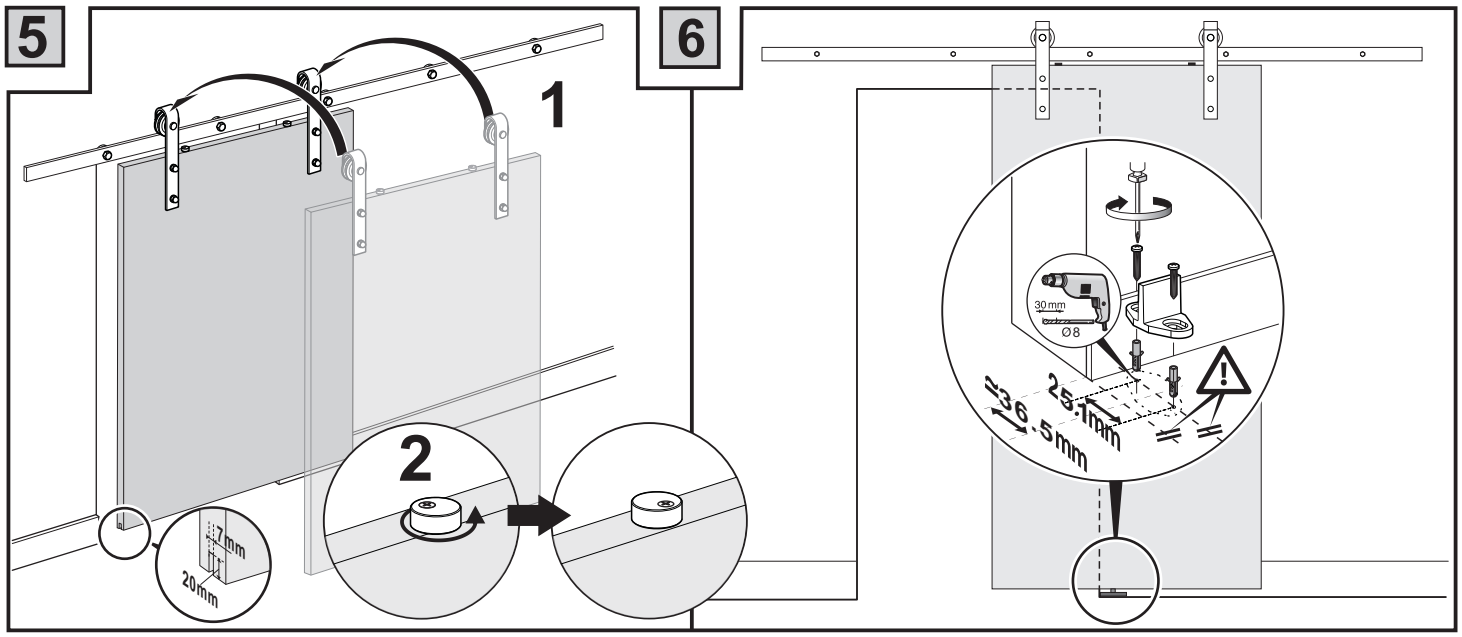
5
1
2
7mm
20mm
6
30 mm
Ø8
25.1mm
36.5mm

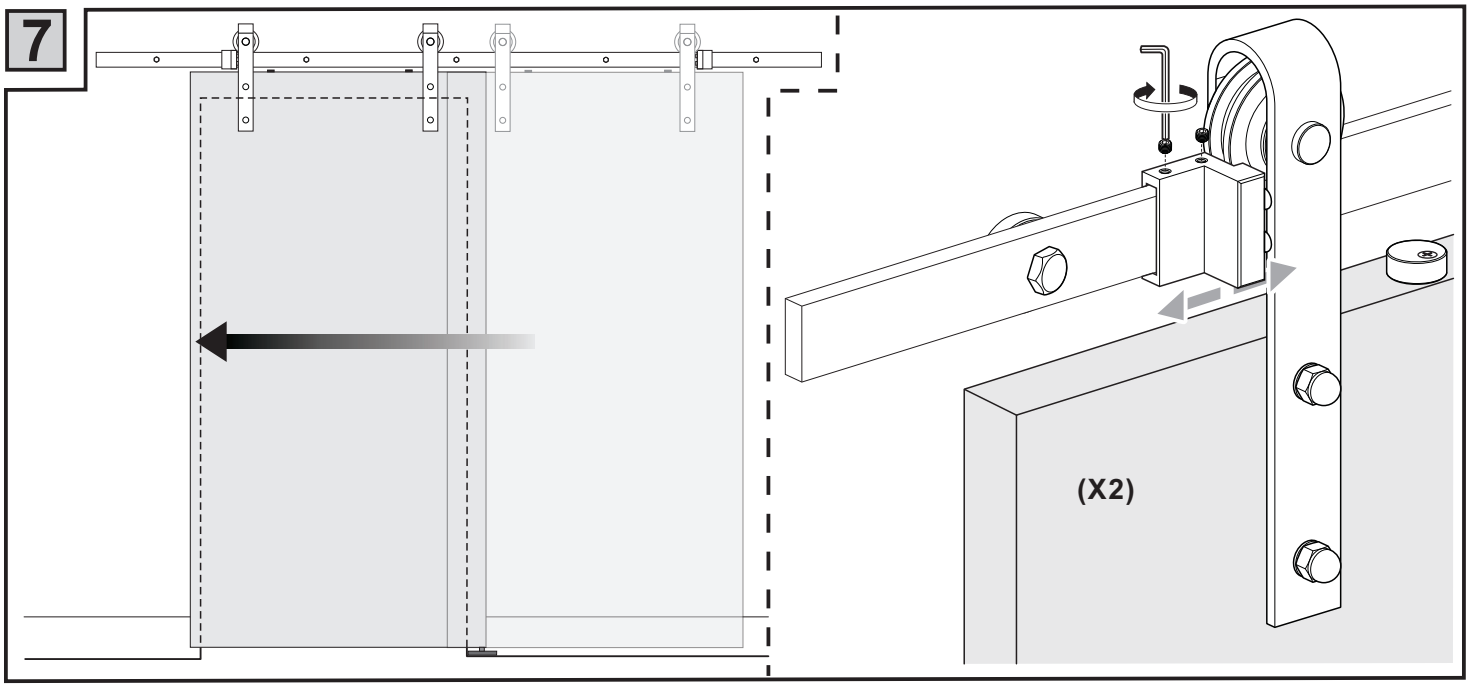
7
(X2)