Installation Manual

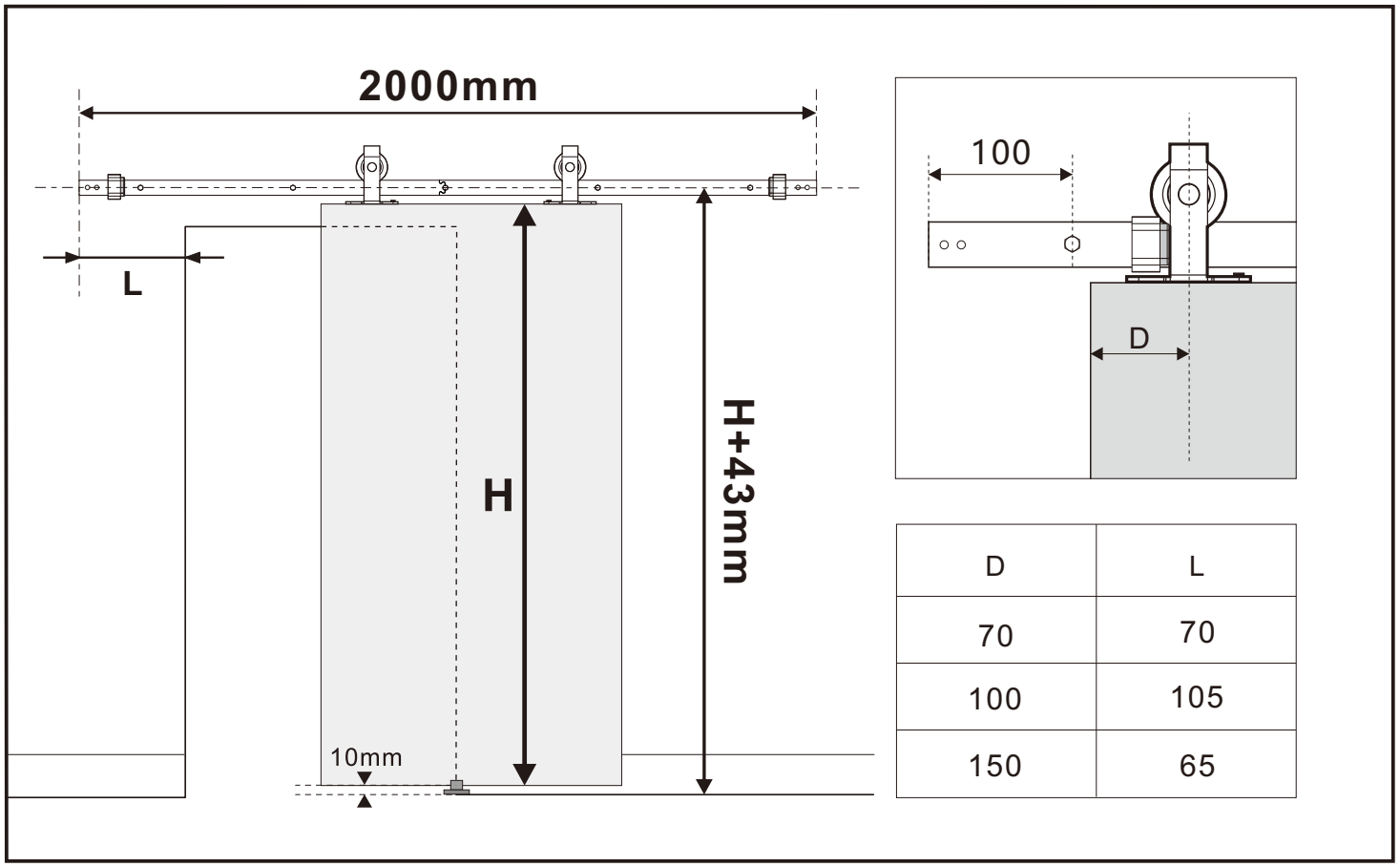

D	L
70	70
100	105
150	65

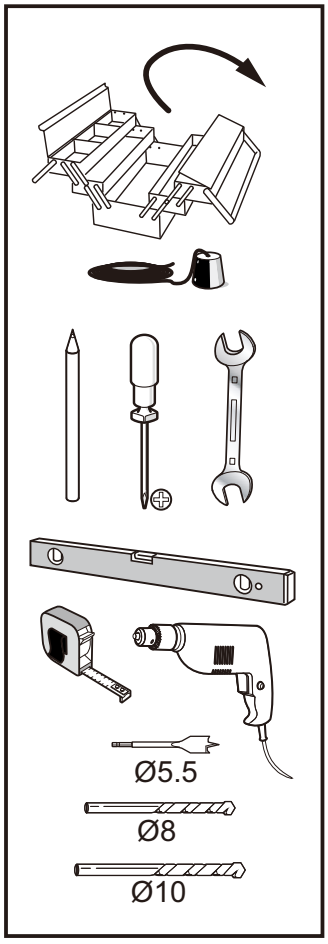

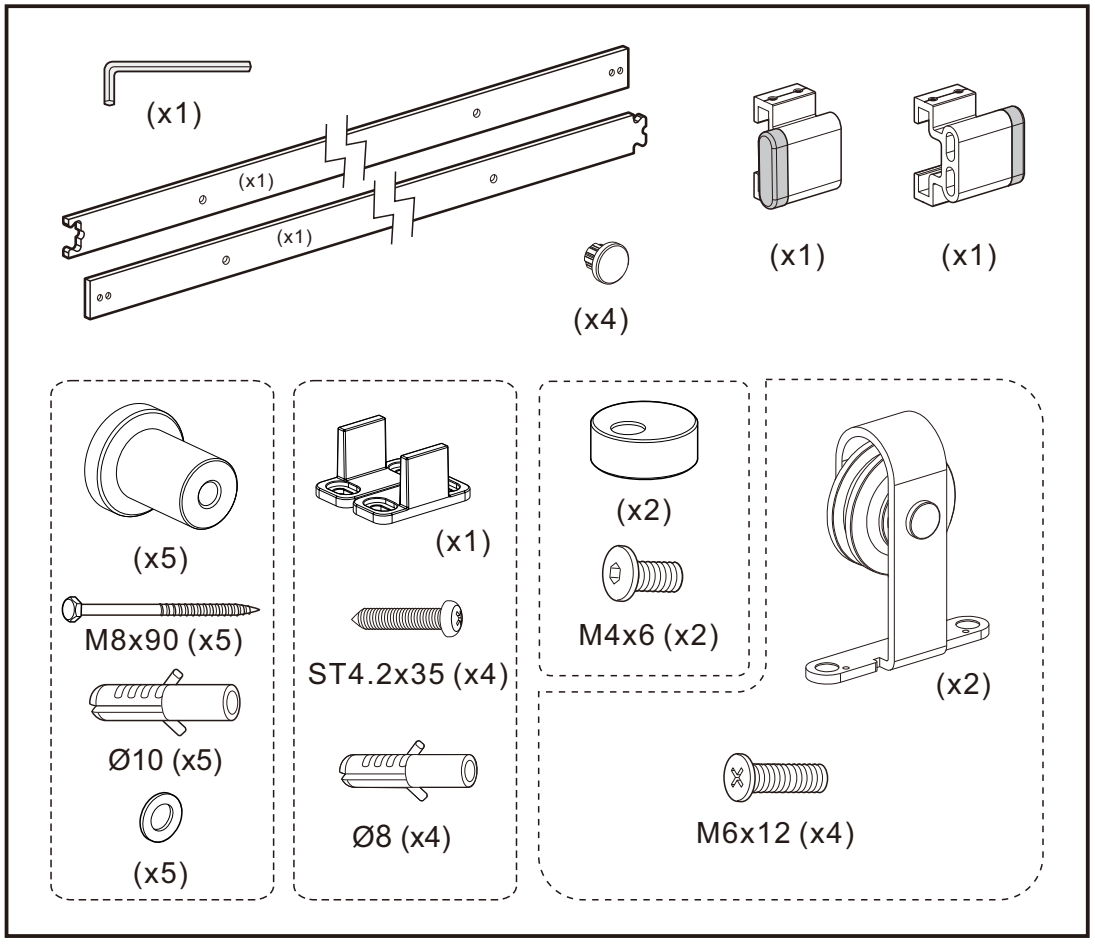

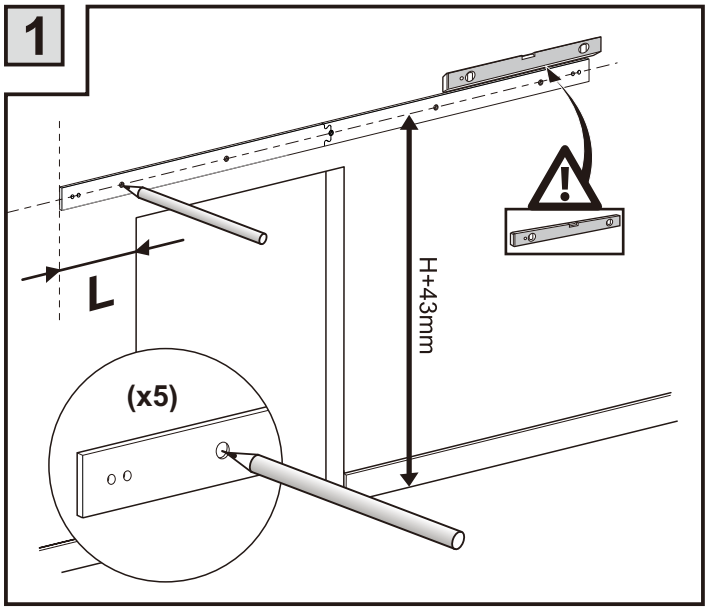
1
L
H+43mm
(x5)

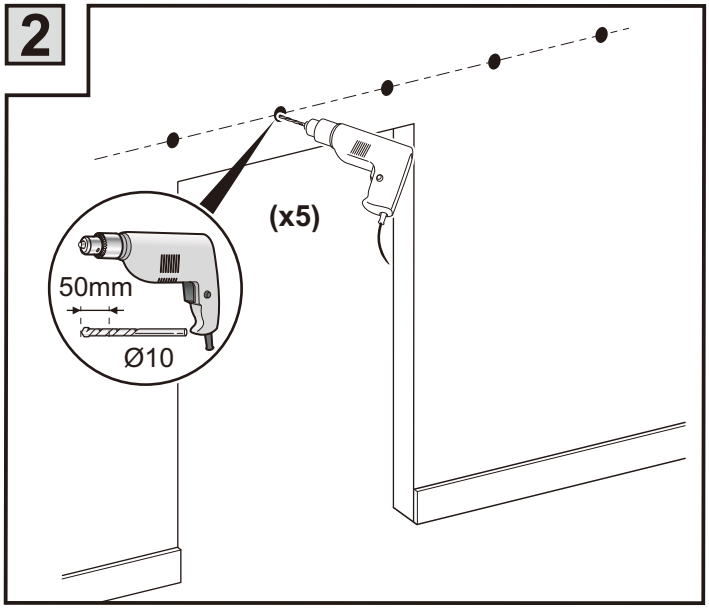
2
(x5)
50mm
Ø10

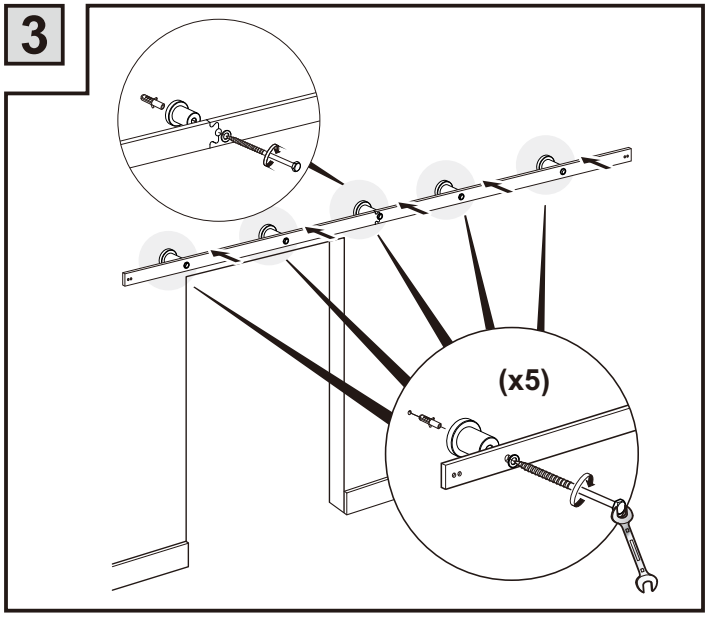
3
(x5)

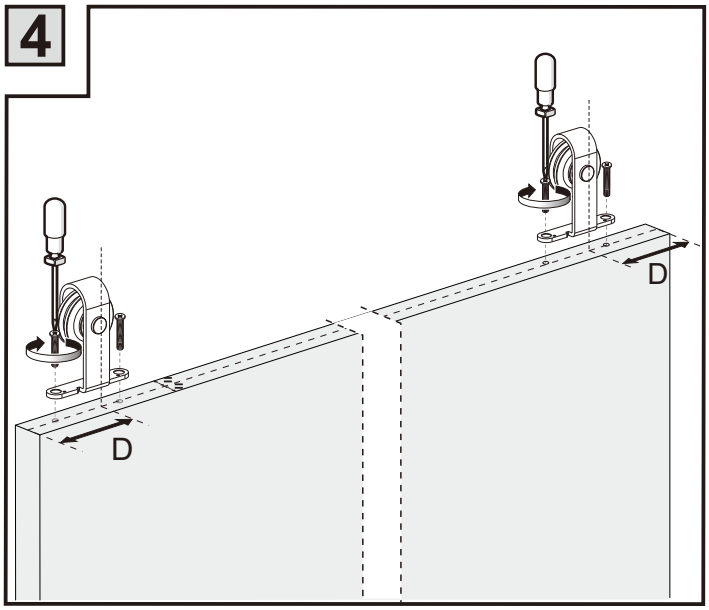
4
D
D

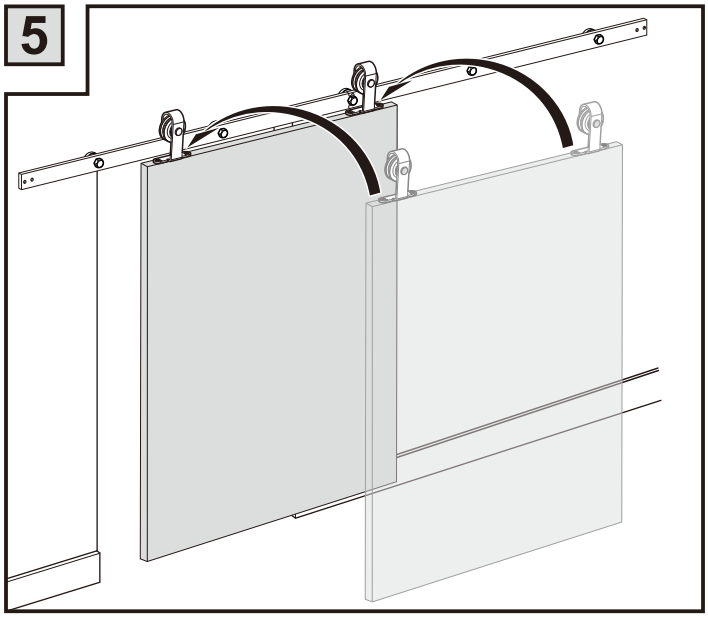
5

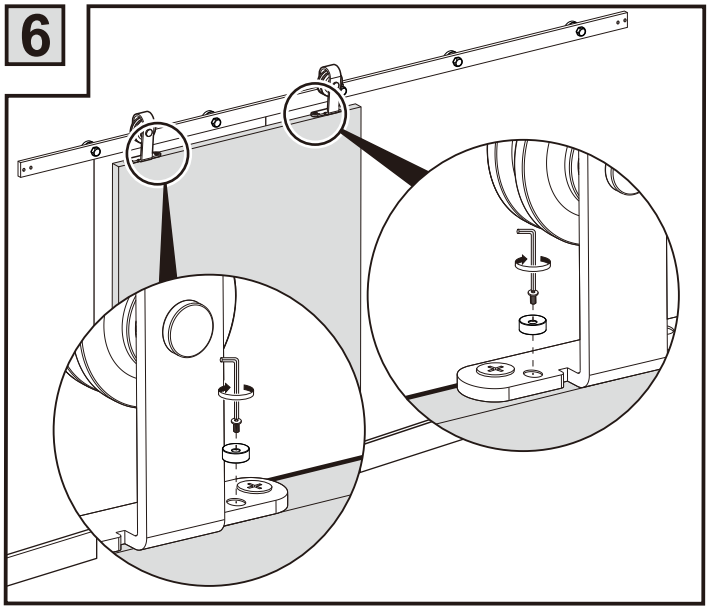
6

7

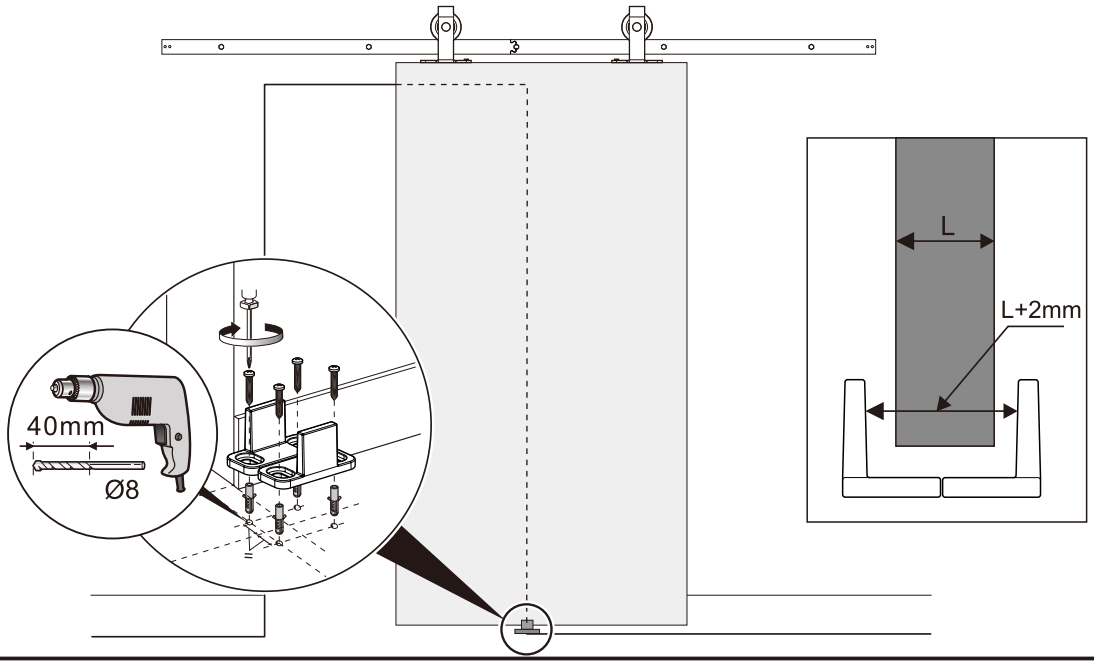

8

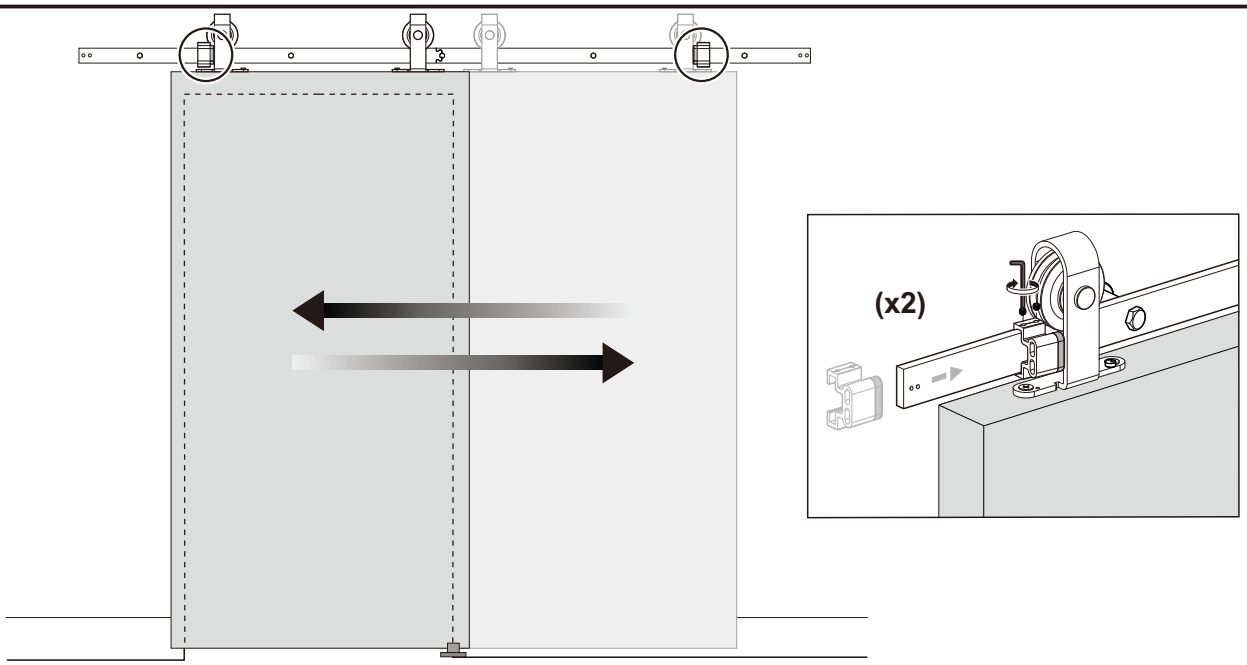
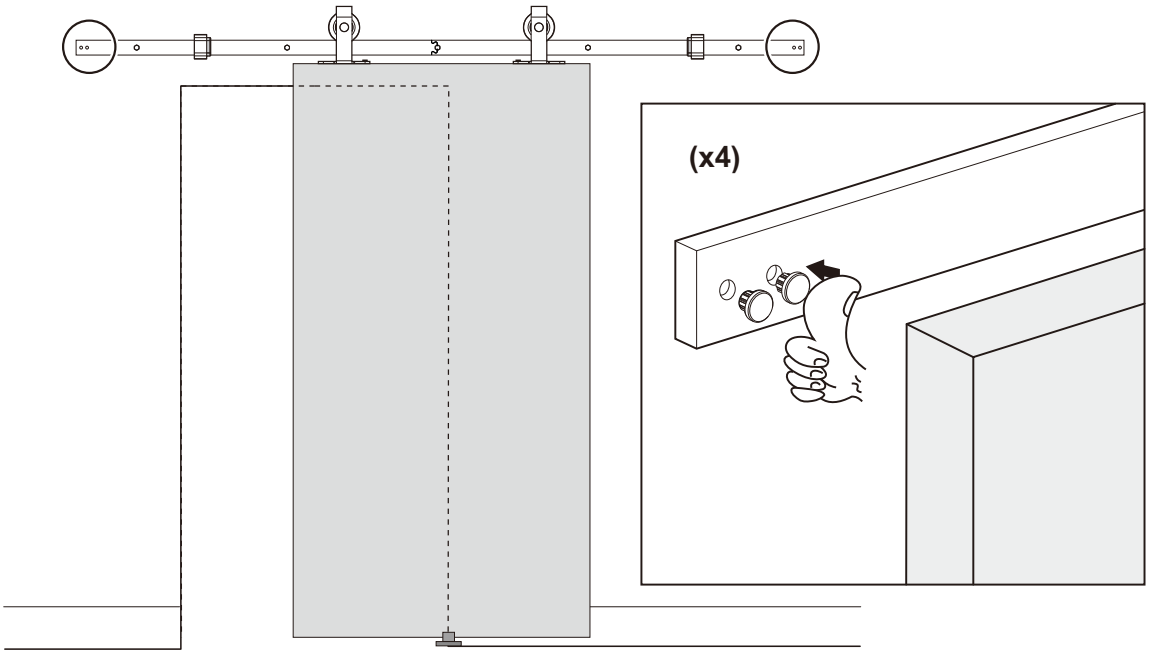
9